Available online at www.sciencedirect.com
ScienceDirect
Proceedings of the Combustion Institute 33 (2011) 775–782
Proceedings of the Combustion Institute
www.elsevier.com/locate/proci

Simultaneous dual-plane CH PLIF, single-plane OH PLIF and dual-plane stereoscopic PIV measurements in methane-air turbulent premixed flames

Masayasu Shimura [a,*], Takashi Ueda [a], Gyung-Min Choi [b], Mamoru Tanahashi [a], Toshio Miyauchi [a]

[a] *Department of Mechanical and Aerospace Engineering, Tokyo Institute of Technology, 2-12-1 Ookayama, Meguro-ku, Tokyo 152-8550, Japan*
[b] *School of Mechanical Engineering, College of Engineering, Pusan National University, Busan 609-735, Republic of Korea*

Available online 6 August 2010

Abstract

Simultaneous dual-plane CH planar laser induced fluorescence (PLIF), single-plane OH PLIF and dual-plane stereoscopic particle image velocimetry (PIV) measurement has been developed to investigate three-dimensional structures of methane-air turbulent premixed flame. Dual-plane CH PLIF system consists of two independent conventional CH PLIF measurement systems and laser beams from each laser system are led to parallel optical pass using the difference of polarization, and CH PLIF is conducted in two parallel two-dimensional cross-sections. Dual-plane stereoscopic PIV was established by using the difference of wavelength. The dual-plane CH PLIF and stereoscopic PIV are combined with single-plane OH PLIF. The laser sheet for single-plane OH PLIF is located at the center of two planes for CH PLIF and stereoscopic PIV. The separation between each plane is set to about 170 μm. The spatial resolution of PIV is set to 175 μm (about three times Kolmogorov length scale) × 175 μm × 210 μm and is same as that of general direct numerical simulations (DNSs) of turbulence. This simultaneous measurement can provide three-dimensional flame front, three velocity components and nine velocity derivatives. The measurement is conducted in methane-air swirl-stabilized turbulent premixed flames of $Re_\lambda = 63.1$, 95.0 and 115.0. Various complicated three-dimensional flame structures such as the handgrip and spire structures, which have been shown by previous three-dimensional DNSs, are observed in high Reynolds number turbulent premixed flames. Magnitude of strain rate, which is evaluated from nine velocity derivatives, shows high value in unburnt region except for the region engulfed by burnt gas. These results show that the simultaneous dual-plane CH PLIF, single-plane OH PLIF and dual-plane stereoscopic PIV measurement is useful for investigating the characteristics of turbulent premixed flames.
© 2010 The Combustion Institute. Published by Elsevier Inc. All rights reserved.

Keywords: Laser diagnostics; Simultaneous PLIF/PIV; Dual-plane stereoscopic PIV; Simultaneous CH–OH PLIF; Turbulent premixed flames

* Corresponding author. Fax: +81 3 5734 2505.
E-mail address: mshimura@navier.mes.titech.ac.jp (M. Shimura).

1540-7489/$ - see front matter © 2010 The Combustion Institute. Published by Elsevier Inc. All rights reserved.
doi:10.1016/j.proci.2010.05.026

1. Introduction

In turbulent combustion, turbulent flame structure has strong interaction with turbulent flow field, which results in the increase of flame area, fluctuation of local heat release rate and so on. Flame surface is distorted strongly by turbulent motion, which is commonly expressed by the flame curvature and turbulence-induced strain rate at the flame front in the turbulent combustion models, especially in flamelet approach.

The recent three-dimensional DNSs [1–8] have revealed the characteristics of turbulent premixed flames and local flame structures which are hardly expected from theoretical classifications such as a turbulent combustion diagram [9]. Nada et al. [6] have reported that three-dimensional flame structures, which are caused by strong fine scale eddies in turbulence, appear even in laminar flamelet regime in the turbulent combustion diagram. These characteristics due to flame–turbulence interaction should be investigated experimentally.

Laser diagnostics combining planar laser induced fluorescence (PLIF) of molecules or radicals produced in chemical reactions and particle image velocimetry (PIV) have been applied for the investigations of turbulent flame structure [10–14]. However, lots of studies are restricted to the two-dimensional measurements. Since turbulent flames have inherently three-dimensional structure, requirements of three-dimensional measurements have been insisted in previous studies [15,16]. Although reconstruction of three-dimensional flame structures has been reported for mean progress variable [17], it is difficult to investigate instantaneous three-dimensional flame structures. Crossed-plane tomography by Knaus and Gouldin [18] can obtain the three-dimensional flame structure only on the line of intersection. In our previous study [15], dual-plane CH PLIF has been developed and combined with single-plane OH PLIF, which achieves triple-plane measurements of the flame structure and clarifies the characteristics of three-dimensional flame front and possibility for exact estimation of flame curvature. Due to limitations of single-plane experiments of flow field, strain rate has been evaluated by using velocity gradients only in a measurement plane [19,20]. In our previous study [21], comparison of probability density functions of tangential strain rate on flame front obtained by three-dimensional DNS of turbulent premixed flame and simultaneous CH–OH PLIF/single-plane stereoscopic PIV measurement has shown that six components of velocity gradient are not enough to estimate tangential strain rate. Therefore, measurements of three-component velocity and nine-component velocity gradient are necessary to calculate strain rate precisely and to investigate the relation between flame structure and turbulence in detail. Paralleled dual-plane tomography and stereoscopic PIV (conditioned PIV) have been utilized for evaluation of the subgrid scalar flux in turbulent premixed flames [22], whereas tomography is not always appropriate for identification of flame fronts.

In this study, simultaneous dual-plane CH PLIF, single-plane OH PLIF and dual-plane stereoscopic PIV has been developed to investigate three-dimensional nature of turbulent premixed flames. The simultaneous measurement is applied to relatively high Reynolds number methane-air turbulent premixed flames in the swirl-stabilized combustor which was used in our previous studies [13,23,24]. Typical turbulent premixed flame structures are presented. Furthermore, strain rate is precisely evaluated from nine-component velocity gradient and its relation to flame structures is discussed.

2. Experimental methods

2.1. Dual-plane CH PLIF and single-plane OH PLIF

The schematic diagram of the experimental setup for the simultaneous measurement is shown in Fig. 1. For CH PLIF measurement, the $Q_1(7,5)$ transition of the $B^2\Sigma^-$–$X^2\Pi(0,0)$ band at 390.30 nm is excited and fluorescence from the A–$X(1,1),(0,0)$ and B–$X(0,1)$ bands between 420 and 440 nm is detected. The dual-plane CH PLIF is comprised by combining two independent CH PLIF systems [15]. First dye laser (Lambda Physik, Scanmate2) is pumped by a XeCl excimer laser (Coherent Inc., COMPex102, 308 nm, 200 mJ/pulse) with BiBuQ dye in *p*-dioxane solvent and second dye laser (Sirah, Cobra-stretch) is pumped by a Nd:YAG laser (Spectra Physics, Quanta Ray PRO-230-10, 355 nm, 400 mJ/pulse) with Exalite389 dye in *p*-dioxane solvent. These laser systems generate laser beams of about 15 and about 20–22 mJ/pulse, respectively. Laser beams from each laser system are led to parallel optical pass using the difference of polarization. Details of the generation methods for parallel laser sheets of 390.30 nm can be found in our previous study [15]. Fluorescence from excited CH radicals are detected by two intensified CCD cameras (Andor Technology, iStar DH734-25U-03, 1024 × 1024 pixels) fitted with 105 mm/f2.8 lens (Nikon, Micro-Nikkor) and optical band-pass filters (Semrock, FF01-434/17-50.8-D, about 92% transmission) to block flame radiation and scattering light by particles. These cameras are located on the opposite side of the combustor, and optical axes are set to be perpendicular to the laser sheet.

For single-plane OH PLIF, the $Q_1(7)$ transition of the $A^2\Sigma^-$–$X^2\Pi(1,0)$ band at 282.93 nm is excited and fluorescence from the A–$X(1,1),(0,0)$ and B–$X(0,1)$ bands between 306 and 320 nm is

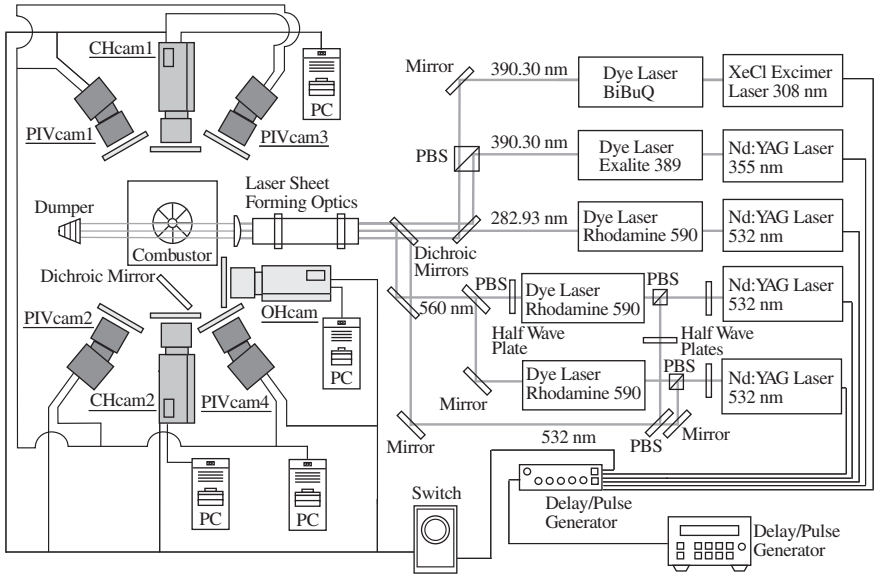

Fig. 1. Schematic diagram of simultaneous dual-plane CH PLIF, single-plane OH PLIF and dual-plane stereoscopic PIV measurement.

detected. The laser system consists of a Nd:YAG laser (Continuum, Powerlite9030, 532 nm, 200 mJ/pulse) and a dye laser (Lambda Physik, Scanmate2) with Rhodamine 590 dye in methanol solvent and a second harmonic generator. The laser beam for OH PLIF is led to the axis parallel to the lasers for CH PLIF by a dichroic mirror. The fluorescence from the excited OH radical is reflected by a dichroic mirror and imaged onto the third intensified CCD camera (Princeton Instruments, PI-MAX 51RB-G1, 512 × 512 pixels) fitted with UV lens (Nikon, UV-Nikkor, 105 mm/f4.5) and optical filters (SCHOTT, WG-305 and UG-11, about 55% transmission totally). Three-dimensional flame structures can be evaluated from triple-plane PLIF of CH and OH radicals, since our previous study [13] has shown that the edge of OH radical coincides with CH layer.

2.2. Dual-plane stereoscopic PIV

Dual-plane stereoscopic PIV using non-spherical particles can be accomplished by utilizing the difference of laser wavelength. One plane is illuminated by 532 nm laser and another is done by 560 nm one, which is established by two Nd:YAG lasers (Spectra Physics, INDI-40, 532 nm, 200 mJ/pulse) and two dye lasers (Lambda Physik, Scanmate2) with Rhodamine 590 dye in methanol solvent. The polarization of laser beams from Nd:YAG lasers are rotated about 20° by half-wave plates to adjust the intensities of particle images at 532 and 560 nm to be almost the same. The lasers are divided by polarizing beam splitters (PBS), and the beams with vertical polarization pumps the dye lasers. The polarization of one laser beam of each wavelength is rotated 90° by a half-wave plate to be combined with the other through PBS. Laser beams of 532 and 560 nm are led to parallel axis by a dichroic mirror. The parallel laser sheets expanded by laser sheet forming optics are adjusted to those for dual-plane CH PLIF. Scattered light from particles is imaged on to four double frame CCD cameras (Princeton Instruments, MegaPlus II ES4020, 2048 × 2048 pixels) with 200 mm/f4 lens (Nikon, Micro-Nikkor) and a teleconverter (Kenko, Teleplus MC7) which doubles the focal length. The cameras are located at the each side of the ICCD cameras for CH PLIF with about ±17.5° to capture stereoscopic particle images, and Scheimpflug condition [25] is applied. Band-pass filters for 532 nm (Shonan Optical Thin Film Laboratories, 532 nm, about 68% transmission) and 560 nm (Semrock, FF01-560/14-25, about 93% transmission) are installed to the cameras which detect backward scattering for 532 nm and forward one for 560 nm, respectively. Therefore, laser intensity at 532 nm is set to be higher than that at 560 nm. As for particles of PIV, Al_2O_3 with 0.18 μm diameter is used in the previous study [13]. However, such kind of small particles tends to flocculate. Furthermore, the bulk density of Al_2O_3 is very high (about 4 g/cm^3), hence it is not easy to seed the Al_2O_3 particles in sufficient density. In the present study, to avoid particle flocculation and achieve high particle density, SiO_2 particles with 1 μm

diameter, which has small bulk density of about 0.2 g/cm^3, are selected for seeding particles.

In this study, a high spatial resolution PIV algorithm developed in our previous studies [26,27] is used to calculate the two-dimensional velocity field from successive particle images obtained by each CCD camera. To ensure the accuracy of the PIV measurement, the elimination scheme of spurious vectors and noise is established by a PIV simulation based on DNS of particle-laden homogeneous isotropic turbulence, and gives high correlation (about 98%) with DNS of turbulence [27]. The elimination scheme is mainly used for cutoff of the high wave number noise that exceeds the spatial resolution of PIV. The high wave number noise is introduced by overlap of the interrogation regions. From two-dimensional velocity fields obtained by each CCD camera, three-component velocity vectors on a two-dimensional plane are calculated by using a geometrical relation [28].

From the three velocity components on the dual planes, nine velocity gradients on OH PLIF plane are calculated. The velocities are linearly interpolated, and velocity gradients in the in-plane directions ($\partial u_i/\partial x$ and $\partial u_i/\partial y$) are derived by the 4th-order central finite difference method (FDM) using the interpolated velocities. Velocity gradients in the out-of-plane directions ($\partial u_i/\partial z$) are calculated by the 2nd-order central FDM using the velocities on the dual planes. The accuracy of the above scheme has been proven in our previous study for non-reacting turbulence [27].

2.3. Timing control for simultaneous dual-plane CH PLIF, single-plane OH PLIF and dual-plane stereoscopic PIV measurement

To take CH PLIF images on two planes by different cameras, time separation of 50 ns is set in dual-plane CH PLIF. This time difference is short enough for the turbulent premixed flame to maintain its structure. After the first CH PLIF, OH PLIF was conducted with 25 ns delay. To optimize signal-to-noise ratio, gate time of image intensifiers for dual-plane CH PLIF and single-plane OH PLIF are set to 30 ns [13]. These PLIF measurements were conducted between the first and second frames for dual-plane stereoscopic PIV. Exposure time of first frame of PIV is set to 130 μs at minimum, whereas second frame is originally longer (several hundreds of ms). To reject flame radiation, exposure time for second frame of PIV is improved to about 250 μs by controlling liquid-crystal shutters (LC-TEC Displays, FOS-PSCT Optical-Shutter, switching speed <0.3 ms). Timing control of the simultaneous measurement is conducted by two delay/pulse generators (Stanford Research Systems, DG535 and LabSmith, LC880) and delay systems of ICCD cameras.

3. Experimental apparatus and conditions

This simultaneous measurement is applied to methane-air turbulent premixed flames in the swirl-stabilized combustor shown in Fig. 2. The details of the combustor have been presented in the previous study [13,23,24]. Methane-air mixture passes through swirl vanes which are inclined 45° from the nozzle axis. Turbulent premixed flame is generated in the combustion chamber of 120 mm × 120 mm cross-section. The coordinate system is defined that x-axis is main flow direction, y-axis is direction of laser travel and z-axis is perpendicular to the other axes.

Conditions of flow rate (Q) were set to 200, 250 and 300 L/min, and equivalence ratio was fixed in 1.0. Measurement regions are denoted by a solid rectangular for PLIF and a dotted rectangular for PIV in Fig. 2. The size of the measurement regions was 29.8 × 29.8 mm^2 for CH PLIF, 29.0 × 29.0 mm^2 for OH PLIF and 12.6 × 12.6 mm^2 for PIV. Central position of measurement region for PLIF is set to the same position with the previous study [13]. The turbulence characteristics at the central position are clarified in

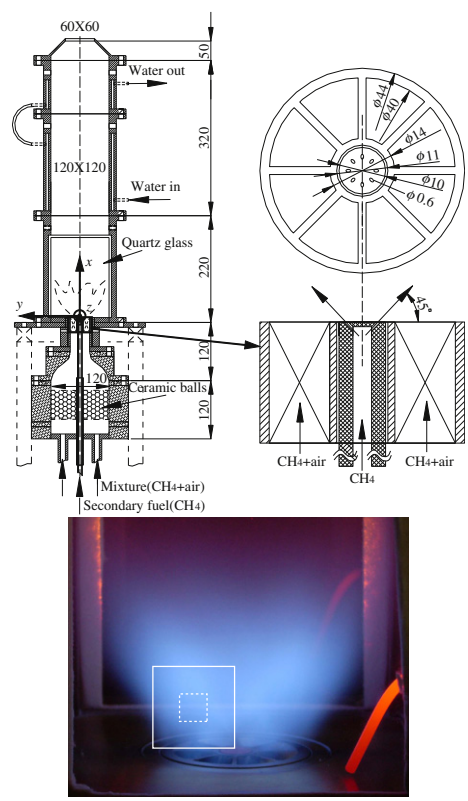

Fig. 2. Swirl-stabilized combustor and direct photograph of turbulent premixed flame for $Q = 300$ L/min. Measurement region is drawn by solid lines for PLIF and dotted lines for PIV.

the previous study [13]. Reynolds number based on Taylor microscale (λ) and $u'_{rms}(Re_\lambda)$ are 63.1, 95.0 and 115.0 for $Q = 200$, 250 and 300 L/min. Kolmogorov length scale (η) is about 50 μm for each condition. Based on the characteristics of the turbulent flames in this study, the camera resolutions are determined to be 29.1 μm for CH PLIF, 56.6 μm for OH PLIF and 4.88 μm for PIV. This means that the spatial resolution of PIV is determined to be 175 μm ($\approx 3\eta$) for 36×36 pixels interrogation region. This spatial resolution of PIV corresponds to same order with that of general DNS of turbulence. Note that the velocity vectors are evaluated with 55.6% overlap of the interrogation regions. In this sense, velocity vectors are obtained every 83.3 μm. Time interval of PIV is set to about 3.0 μs.

Figure 3 shows the intensity profiles for the laser sheets in the perspective direction at the center of the measurement region. These profiles are measured by a beam profiler (Ophir, FX-50). Peak position of laser for OH PLIF is set to the point of origin. Mean FWHM thicknesses of laser sheets, which is referred as spatial resolution in the direction normal to the measurement plane, were set to about 210 μm for CH PLIF, 242 μm for OH PLIF and 210 μm for PIV. Figure 4 shows the parallelism of the laser sheets. The distance between dual planes is 340 μm and the laser sheet for OH PLIF

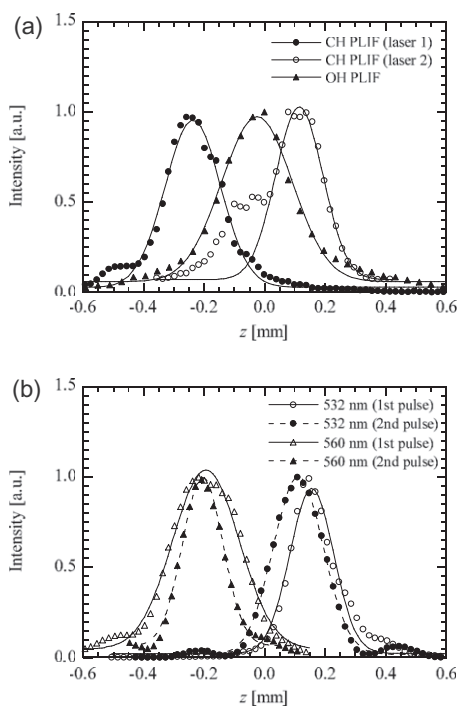

Fig. 3. Intensity profile of laser sheets for dual-plane CH PLIF, single-plane OH PLIF (a) and dual-plane stereoscopic PIV (b).

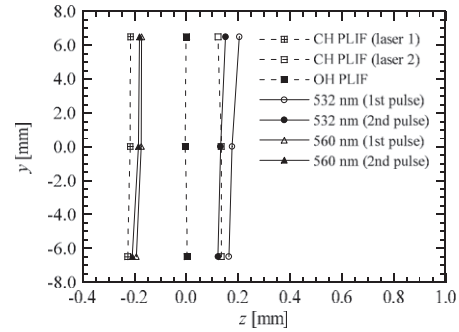

Fig. 4. Peak positions of laser sheets for the simultaneous dual-plane CH PLIF, single-plane OH PLIF and dual-plane stereoscopic PIV.

is located the middle of dual-plane laser sheets within 0.9 mrad through the whole measurement region. These configurations can be changed by regulating the PBSs and dichroic mirrors. The spatial resolutions for z-axis are about four times of η and enough to investigate the swirl-stabilized turbulent premixed flames in this study. Note that the distance between two planes ($\approx$ 340 μm) is about 7η, which is slightly larger than the minimum requirements to resolve small-scale structure (three to four times Kolmogorov length scale). However, since this distance is one third of Taylor microscale, the present dual-plane stereoscopic PIV can resolve turbulent motion larger than that scale.

4. Three-dimensional turbulent flame structures

4.1. Typical fine and large scale flame structures

Figure 5 shows typical three-dimensional flame structures of methane-air turbulent premixed flame obtained by the simultaneous measurements for three Re_λ (or flow rate) cases. The visualized domain is $23.6 \times 23.6\ \mathrm{mm}^2$. The isolines drawn by blue and white represent fluorescence intensity distributions of CH radicals on each plane, and the yellow area represents the unburnt mixture obtained by fluorescence intensity distribution of OH radical. The visualized distance between two measured planes is set to be about 15 times the real scale for easy understanding. White line represents the integral length scale (l) of turbulence for each case.

The realizations shown in the upper of Fig. 5a and c are examples of simplest flame structures. Flame fronts have large scale wrinkling of the order of the integral length scale. Relatively flat flame surfaces which are almost perpendicular to the measurement planes are generated in large scales. It should be noted that Re_λ of cold flow is different largely.

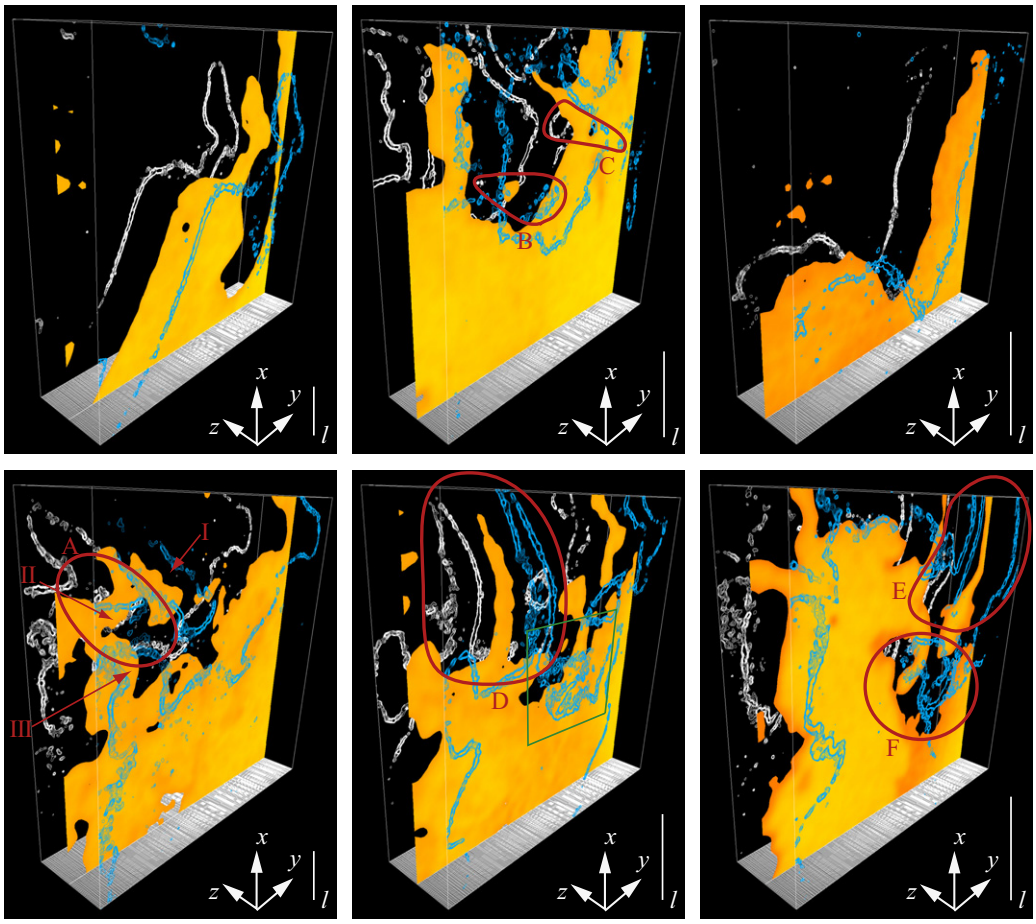

(a) 200 L/min (b) 250 L/min (c) 300 L/min

Fig. 5. Typical three-dimensional flame structures. Blue isolines, distributions of CH radical on the front plane; white isolines, distributions of CH radical on the back plane; yellow regions, unburnt region estimated by distributions of OH radical on the middle plane.

On the other hand, flame structures are heavily fluctuating, and have small-scale wrinkling less than Taylor microscale. Complex flame structures show many differences in three measurement planes even though the separation of each plane is only 170 μm. The region A in the realization shown in the lower of Fig. 5a represents a separating flame structure. Large mass of unburnt mixture exists on the back plane and center plane, whereas flame is divided into three parts on the front plane represented by I, II and III. The regions B and C in the realization shown in the upper panel of Fig. 5b are examples of spiny flame structures. In the region B, the area of white isoline is smaller than that of blue isoline. Hence, isolated unburnt mixture becomes smaller on the back plane. This flame structure corresponds to the spire flame structure suggested by our previous DNS study [6]. In contrast, region C shows a spire structure in the unburnt side. In the realization shown in the lower of Fig. 5b, the region D shows that flame surface is folded and thin layer of unburnt mixture is created. Furthermore, thinner layer of unburnt mixture are generated in the region E of Fig. 5c. The region F in the lower of Fig. 5c represents that the flame front on the front plane is not apart from main flame, whereas the blanch of unburnt mixture on the center plane is just connecting to the main unburnt mixture. This structure shows the engulfment of burnt gas.

These results show that the number of wrinkles of the flame front significantly increases and the flame front shows a very complicated three-dimensional geometry with the increase of Reynolds number. Three-dimensional DNS [1,2,6]

and fractal analysis of OH PLIF results conducted in high pressure turbulent premixed flames [29] have shown that the smallest curvature radius of the flame front is the Kolmogorov length scale of the unburnt mixture. As the Kolmogorov length scale in the present study does not change largely, flames wrinkling increases flame surface density and total fuel consumption rate.

4.2. Local flame structure of turbulent premixed flame

Dual-plane stereoscopic PIV can provide magnitude of strain rate (a) precisely as $a = S_{ij}S_{ij}$, where S_{ij} denotes symmetric part of the velocity gradient tensor. Figure 6 shows isolines of strain rate on the central plane with distributions of OH radical and flame fronts defined by CH PLIF on the neighboring planes for 250 L/min ($Re_\lambda = 95.0$). For comparison, isolines of strain rate obtained from six-component velocity gradient without velocity derivatives in the transverse direction, assuming use of single-plane stereoscopic PIV. The visualized domain is denoted by the green box in Fig. 5. Intensity of OH radical is denoted by gray scale and dark gray shows lower intensity. Strain rate shows high value in the unburnt region which is denoted by dark gray of OH distribution. The previous studies [27,30–34] revealed that the most expected diameter of coherent fine scale eddies in turbulence is 8η, and that turbulent energy dissipation rate shows high value around the coherent fine scale eddies [31,32]. The fluctuation of strain rate can be observed in nearly the same scale with the diameter of the eddies in the unburnt region. In the burnt region, strain rate shows lower value due to dilatation effect. However, even in the unburnt region, strain rate shows relatively low value in the unburnt mixture engulfed by burnt gas as is denoted by a circle in Fig. 6a. Distribution of strain rate evaluated from six components of velocity gradients (Fig. 6b) is globally similar to that calculated from nine components of velocity gradients, whereas is different locally. The magnitude of strain rate is estimated 10% lower at least due to lack of velocity derivatives in the transverse direction.

These results indicate that the turbulent flames have significant three-dimensional nature. Therefore, three-dimensional measurements of the turbulent flames are indispensable to clarify the characteristics of turbulent premixed flames. The simultaneous dual-plane CH PLIF, single-plane OH PLIF and dual-plane stereoscopic PIV measurement developed in this study is one of promising methods to achieve this purpose.

5. Summary and conclusions

Simultaneous dual-plane CH PLIF, single-plane OH PLIF and dual-plane stereoscopic PIV measurement, which can provide three-dimensional flame structure and all velocity/velocity-derivative components, was developed in order to investigate three-dimensional nature of turbulent premixed flame. The simultaneous measurement was conducted in relatively high Reynolds number methane-air swirl-stabilized turbulent premixed flames.

From triple-plane PLIF, one can investigate three-dimensionality of local flame structures,

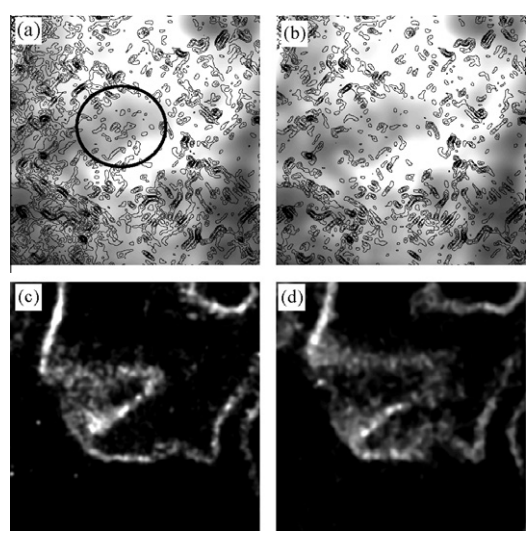

Fig. 6. Isolines of strain rate with distribution of OH radical on the central plane obtained from nine velocity gradient (a) and six velocity gradient (b), and distributions of CH radical corresponding to the back plane (c) and the front plane (d) for 250 L/min ($Re_\lambda = 95.0$).

such as the handgrip and spire structures, which have been shown by previous three-dimensional DNSs [6]. The information on three-dimensionality of local flame structure allows us to evaluate two principal curvature of three-dimensional flame surface. On the other hand, to clarify three-dimensional flame structure in large scales, it might be required to add cross-plane PLIF to the present parallel PLIF.

Dual-plane stereoscopic PIV, which uses difference of laser wavelength, has achieved high spatial resolution as same as that of general DNS of turbulence. From nine velocity gradients, strain rate was evaluated precisely. In addition, to show the advantage of dual-plane stereoscopic PIV, strain rate was calculated from only six velocity gradients without derivatives in the transverse direction assuming the use of single-plane stereoscopic PIV. From the comparison of two strain rate, it was revealed that single-plane stereoscopic PIV gives strain rate that is 10% lower at least.

These results show that the simultaneous dual-plane CH PLIF, single-plane OH PLIF and dual-plane stereoscopic PIV measurement is useful for investigating the characteristics of turbulent premixed flames. Especially, this simultaneous three-dimensional information on curvature and strain rate will contribute to the investigations on flame stretch concept, laminar flamelet approximation and modeling of turbulent premixed flame.

Acknowledgment

This work is partially supported by Grant-in-Aid for Scientific Research (S) (No. 18106004) of Japan Society for the Promotion of Science.

References

[1] M. Tanahashi, M. Fujimura, T. Miyauchi, *Proc. Combust. Inst.* 28 (2000) 529–535.
[2] M. Tanahashi, Y. Nada, Y. Ito, T. Miyauchi, *Proc. Combust. Inst.* 29 (2002) 2041–2049.
[3] K.W. Jenkins, R.S. Cant, *Proc. Combust. Inst.* 29 (2002) 2023–2029.
[4] S. Sreedhara, K.N. Lakshmisha, *Proc. Combust. Inst.* 29 (2002) 2051–2059.
[5] J.B. Bell, M.S. Day, J.F. Grcar, *Proc. Combust. Inst.* 29 (2002) 1987–1993.
[6] Y. Nada, M. Tanahashi, T. Miyauchi, *J. Turbul.* 5 (2004) ARTN016.
[7] R. Sankaran, E.R. Hawkes, J.H. Chen, T. Lu, C.K. Law, *Proc. Combust. Inst.* 31 (2007) 1291–1298.
[8] E.R. Hawkes, R. Sankaran, J.H. Chen, S.A. Kaiser, J.H. Frank, *Proc. Combust. Inst.* 32 (2009) 1455–1463.
[9] N. Peters, *Turbulent Combustion*, Cambridge Press, London, 2000.
[10] P.A.M. Kalt, J.H. Frank, R.W. Bilger, *Proc. Combust. Inst.* 27 (1998) 751–758.
[11] J.O. Sinibaldi, J.F. Driscoll, C.J. Mueller, J.M. Donbar, C.D. Carter, *Combust. Flame* 133 (2003) 323–334.
[12] P.S. Kothnur, M.S. Tsurikov, N.T. Clemens, J.M. Donbar, C.D. Carter, *Proc. Combust. Inst.* 29 (2002) 1921–1927.
[13] M. Tanahashi, S. Murakami, G.-M. Choi, Y. Fukuchi, T. Miyauchi, *Proc. Combust. Inst.* 30 (2005) 1665–1672.
[14] S.A. Filatyev, M.P. Thariyan, R.P. Lucht, J.P. Gore, *Combust. Flame* 150 (2007) 201–209.
[15] T. Ueda, M. Shimura, M. Tanahashi, T. Miyauchi, *J. Mech. Sci. Technol.* 23 (7) (2009) 1813–1820.
[16] Y.-C. Chen, *Proc. Combust. Inst.* 32 (2009) 1771–1777.
[17] M. Tanahashi, S. Inoue, M. Shimura, S. Taka, G.-M. Choi, T. Miyauchi, *Exp. Fluids* 45 (3) (2008) 447–460.
[18] D.A. Knaus, F.C. Gouldin, *Proc. Combust. Inst.* 28 (2000) 367–373.
[19] J.M. Donbar, J.F. Driscoll, C.D. Carter, *Combust. Flame* 125 (2001) 1239–1257.
[20] I. Boxx, C. Heeger, R. Gordon, et al., *Proc. Combust. Inst.* 32 (2009) 905–912.
[21] S. Inoue, S. Taka, Y. Nada, M. Tanahashi, T. Miyauchi, in: *5th Asia-Pacific Conf. Combust.*, 2005, pp. 385–388.
[22] S. Pfadler, J. Kerl, F. Beyrau, et al., *Proc. Combust. Inst.* 32 (2009) 1723–1730.
[23] G.-M. Choi, M. Tanahashi, T. Miyauchi, *Proc. Combust. Inst.* 30 (2005) 1807–1814.
[24] M. Shimura, M. Tanahashi, T. Miyauchi, G.-M. Choi, D.-J. Kim, *Thermochim. Acta* 495 (1-2) (2009) 95–100.
[25] A.K. Prasad, K. Jensen, *Appl. Opt.* 34 (1995) 7092–7099.
[26] M. Tanahashi, M. Ootsu, M. Fukushima, T. Miyauchi, *Eng. Turbul. Model. Meas.* 5 (2002) 525–534.
[27] M. Tanahashi, T. Hirayama, S. Taka, T. Miyauchi, *Int. J. Heat Fluid Flow* 29 (2008) 792–802.
[28] M.P. Arroyo, C.A. Greated, *Meas. Sci. Technol.* 2 (1991) 1181–1186.
[29] H. Kobayashi, T. Kawabata, K. Seyama, T. Fujimari, J.S. Kim, *Proc. Combust. Inst.* 29 (2002) 1793–1799.
[30] J. Jimenez, A.A. Wray, P.G. Saffman, R.S. Rogallo, *J. Fluid Mech.* 255 (1993) 65–90.
[31] M. Tanahashi, S. Iwase, T. Miyauchi, *J. Turbul.* 2 (6) (2001).
[32] M. Tanahashi, S.J. Kang, T. Miyamoto, S. Shiokawa, T. Miyauchi, *Int. J. Heat Fluid Flow* 25 (2004) 331–340.
[33] J.C. Del Alamo, J. Jimenez, P. Zandonade, R.D. Moser, *J. Fluid Mech.* 561 (2006) 329–358.
[34] Y. Wang, M. Tanahashi, T. Miyauchi, *Int. J. Heat Fluid Flow* 28 (2007) 1280–1290.